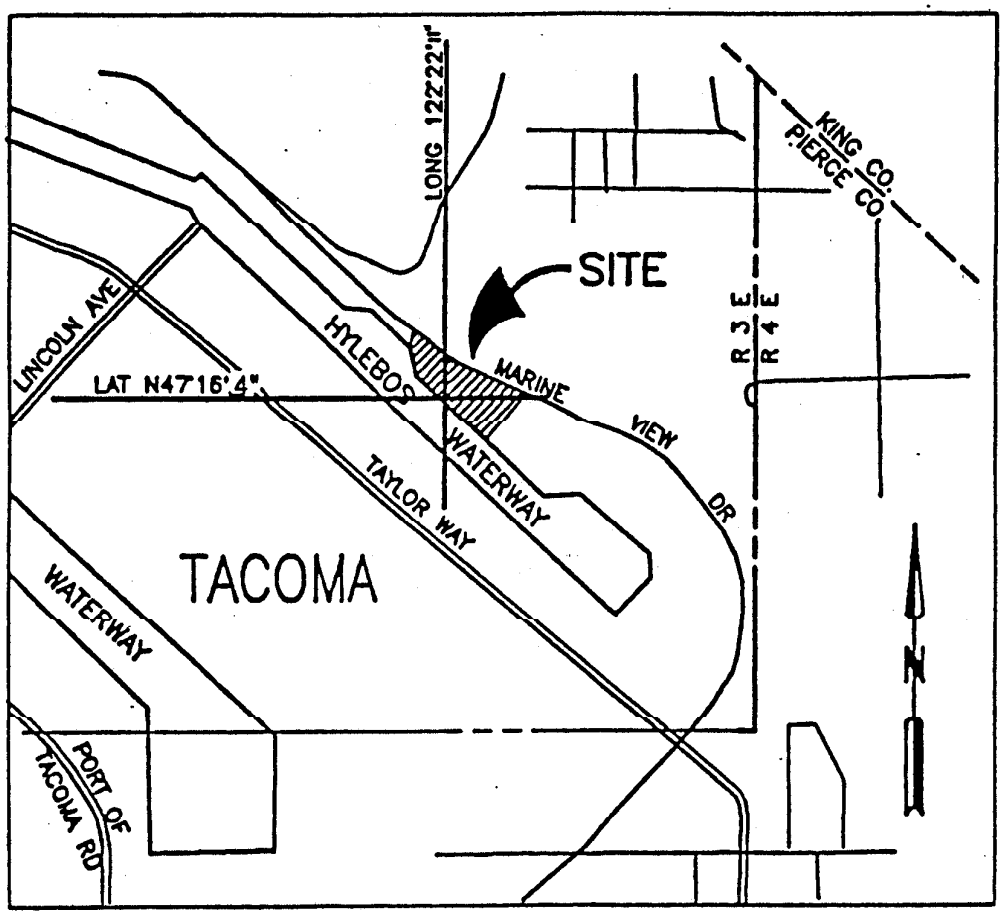

VICINITY MAP

500' 1500'
0' 1000' 2000'

PURPOSE: REPLACE EXISTING STRUCTURES, ADD NEW WHARF AND CAP CONTAMINATED SEDIMENTS.

DATUM: MLLW = 0.0 FEET (N.O.S)

SITE LOCATION: 122° 22' 11" LONGITUDE
N47° 16' 4" LATITUDE

SITE ADDRESS: 1902 MARINE VIEW DRIVE
TACOMA, WA 98422

PIERCE COUNTY
SECTION: 36, TWP: 21N, RGE: 3E

98-2-00516

PROPOSED REPLACEMENT BULKHEAD, NEW WHARF & FILL

IN: HYLEBOS WATERWAY

AT: TACOMA

COUNTY: PIERCE

STATE: WASHINGTON

APPL. BY: GENERAL METALS OF TACO

SHEET: 1 OF 12 4/8/98

REV: 5/1/98

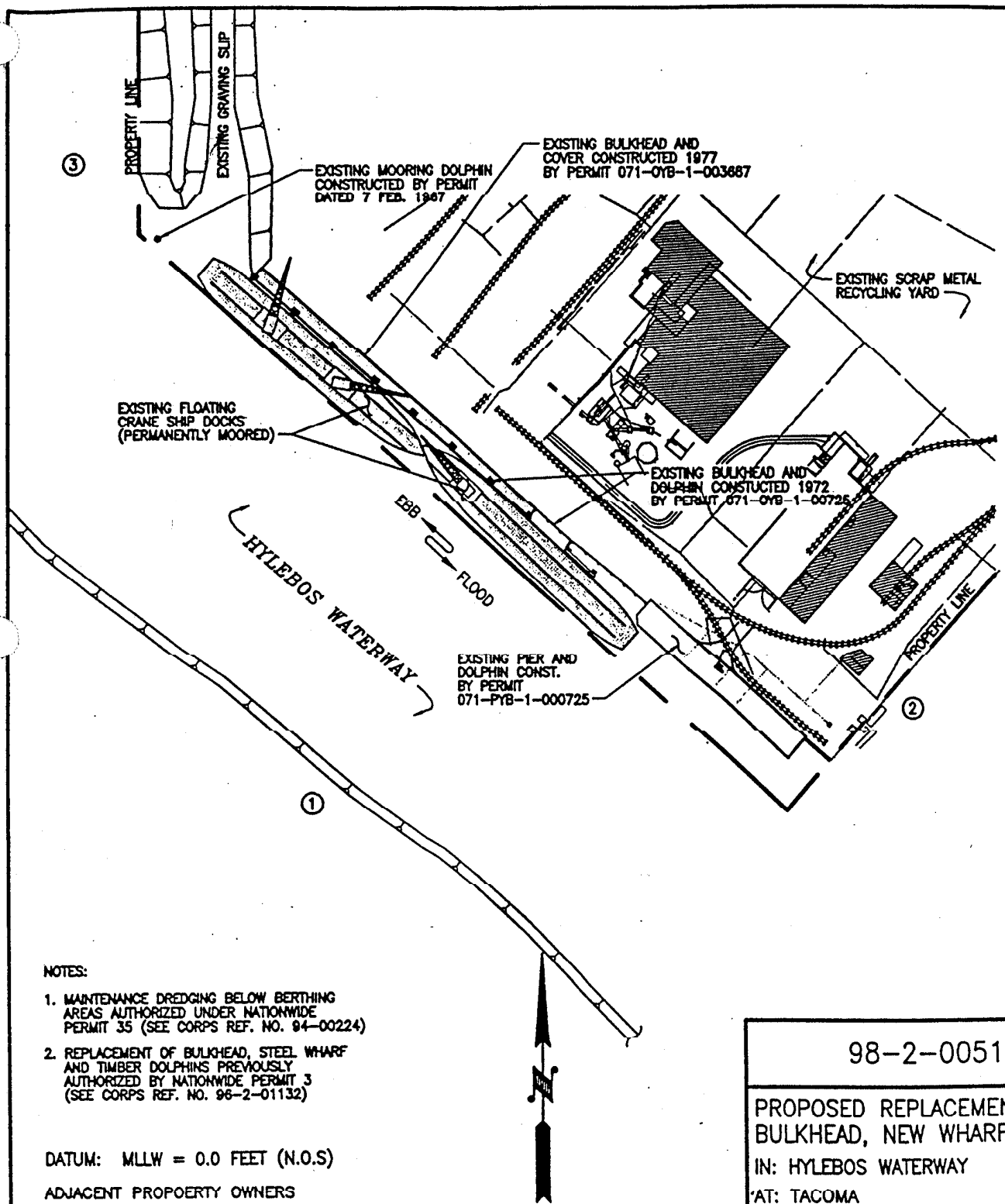

NOTES:

1. MAINTENANCE DREDGING BELOW BERTHING AREAS AUTHORIZED UNDER NATIONWIDE PERMIT 35 (SEE CORPS REF. NO. 94-00224)
2. REPLACEMENT OF BULKHEAD, STEEL WHARF AND TIMBER DOLPHINS PREVIOUSLY AUTHORIZED BY NATIONWIDE PERMIT 3 (SEE CORPS REF. NO. 96-2-01132)

DATUM: MLLW = 0.0 FEET (N.O.S)

ADJACENT PROPOERTY OWNERS

① ELF ATOCHEM
② TACOMA BOATBUILDING
③ HYLEBOS MARINA

GENERAL LOCATION AND EXISTING FEDERAL PERMITS

50' 150'
0' 100' 200'

98-2-00516

PROPOSED REPLACEMENT BULKHEAD, NEW WHARF & FILL

IN: HYLEBOS WATERWAY

AT: TACOMA

COUNTY: PIERCE

STATE: WASHINGTON

APPL. BY: GENERAL METALS OF TACOI

SHEET: 2 OF 12 4/8/98

REV: 5/1/98

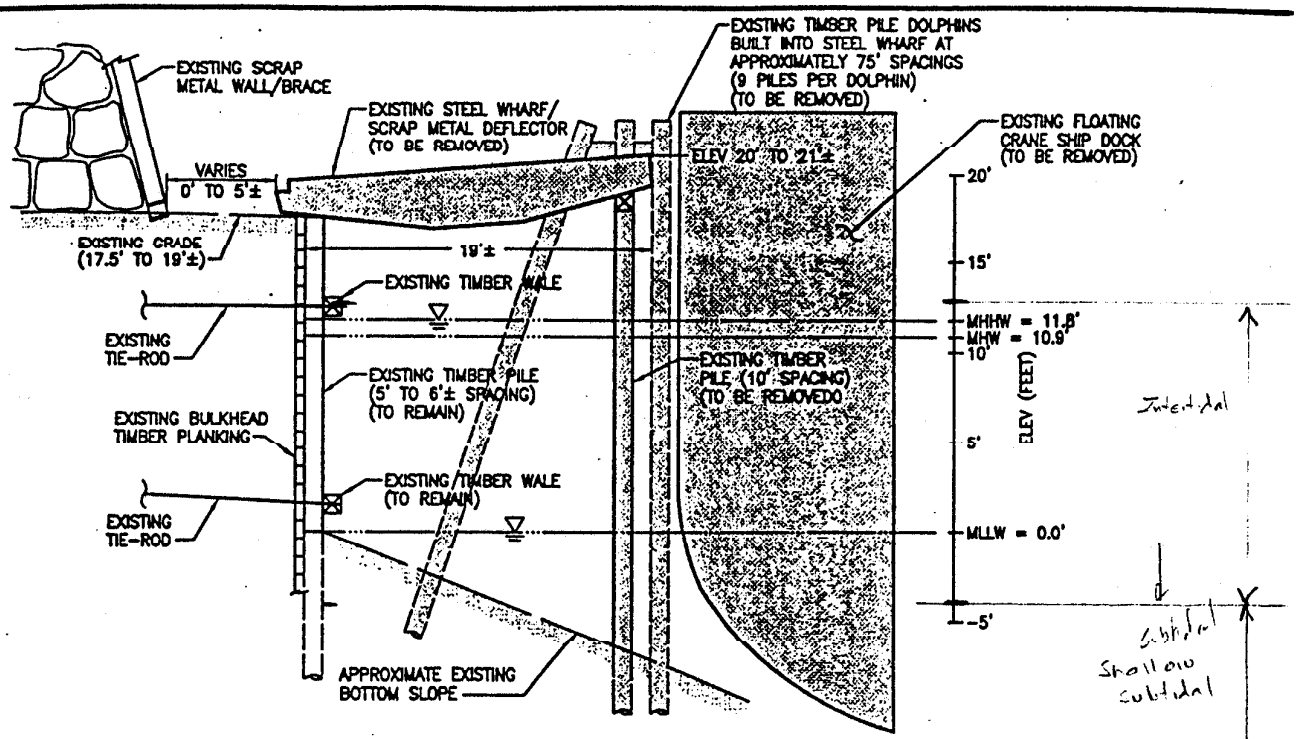

SECTION A–A

TYPICAL EXISTING TIMBER BULKHEAD & STEEL DEFLECTOR WHARF (150'±)

5' 0' 10'

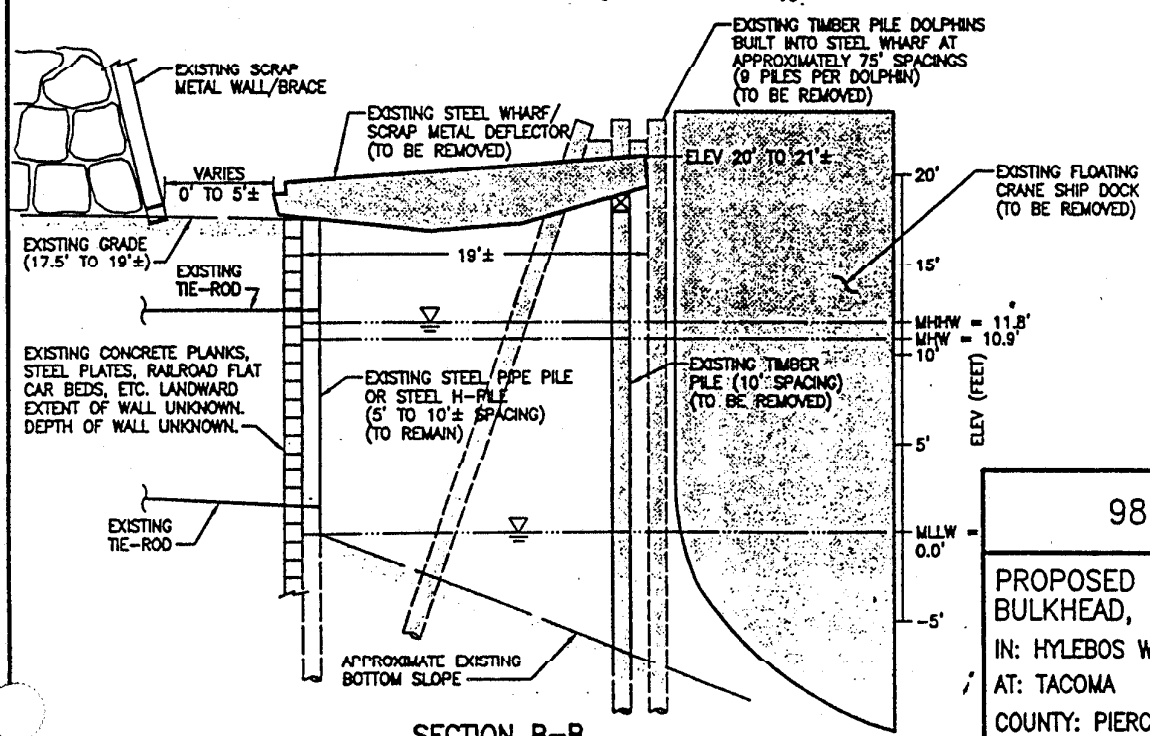

SECTION B–B

TYPICAL EXISTING NON-TIMBER BULKHEAD & STEEL DEFLECTOR WHARF (375'±)

5' 0' 10'

98-2-00516

PROPOSED REPLACEMENT BULKHEAD, NEW WHARF & FILL

IN: HYLEBOS WATERWAY

AT: TACOMA

COUNTY: PIERCE

STATE: WASHINGTON

APPL. BY: GENERAL METALS OF TACOMA

SHEET: 4 OF 12 DATE: 4/8/98

REV: 5/1/98

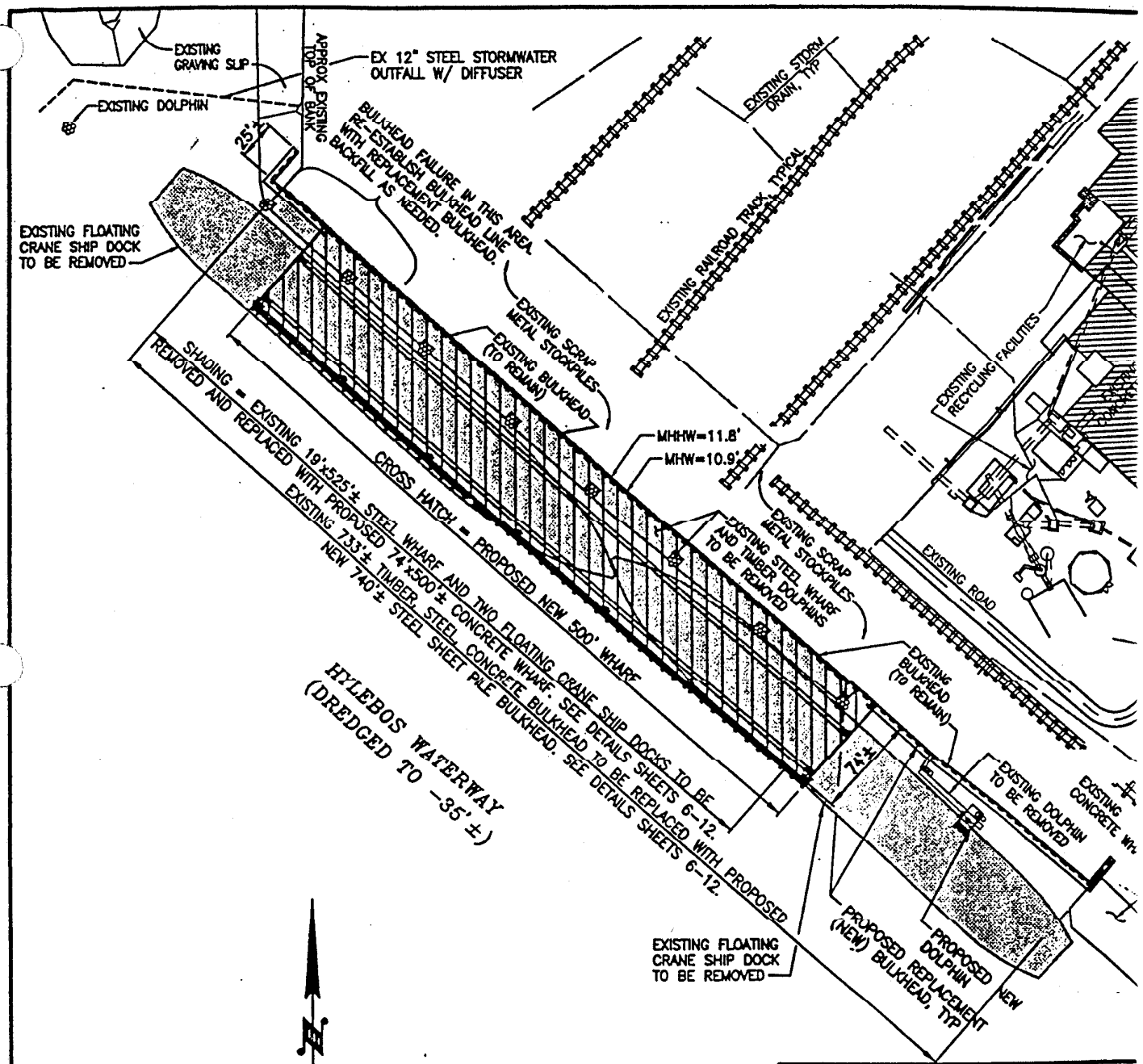

GENERAL SITE PLAN
PROPOSED NEW STRUCTURES

25' 75'
0' 50' 100'

98-2-00516

PROPOSED REPLACEMENT BULKHEAD, NEW WHARF & FILL

IN: HYLEBOS WATERWAY

AT: TACOMA

COUNTY: PIERCE

STATE: WASHINGTON

APPL. BY: GENERAL METALS OF TACO

SHEET: 5 OF 12 4/8/98

REV: 5/1/98

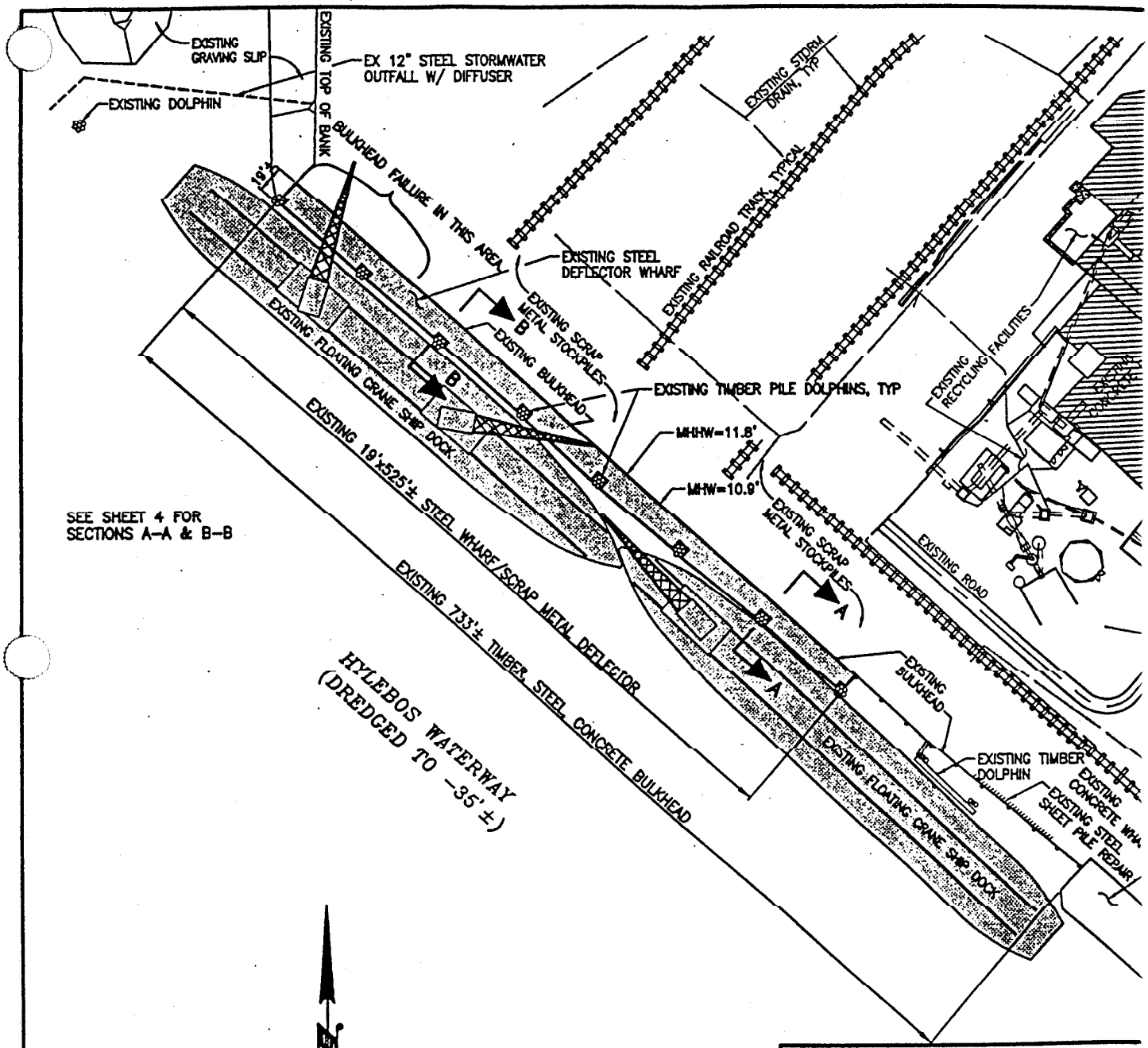

GENERAL SITE PLAN
EXISTING STRUCTURES

25' 75'
0' 50' 100'

98-2-00516

PROPOSED REPLACEMENT BULKHEAD, NEW WHARF & FILL

IN: HYLEBOS WATERWAY

AT: TACOMA

COUNTY: PIERCE

STATE: WASHINGTON

APPL. BY: GENERAL METALS OF TACOM

SHEET: 3 OF 12 4/8/98

REV: 5/1/98

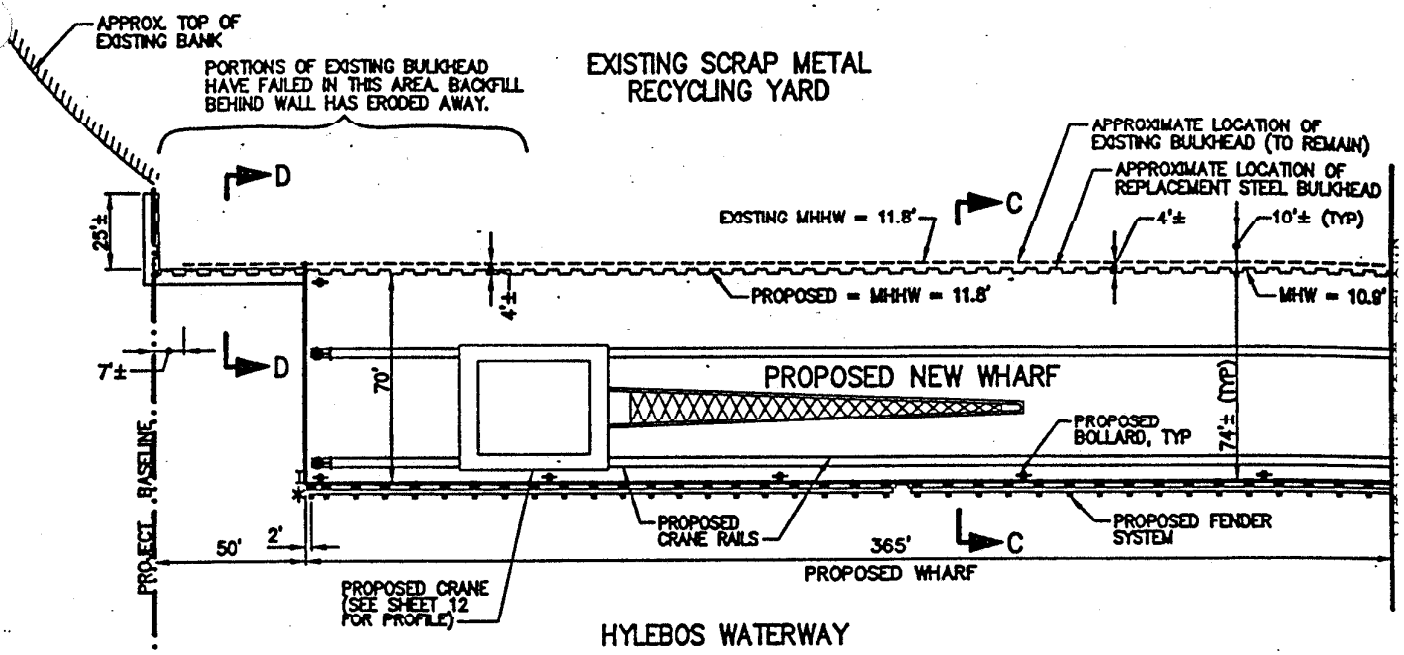

NOTE: WHARF LENGTH = 500'
REPLACEMENT BULKHEAD LENGTH = 740'±

FOR EXISTING STRUCTURES, SEE SHEETS 3 AND 4.

SEE SHEET 7 FOR PILE PLAN.

SEE SHEET 9–12 FOR SECTIONS CC TO FF.

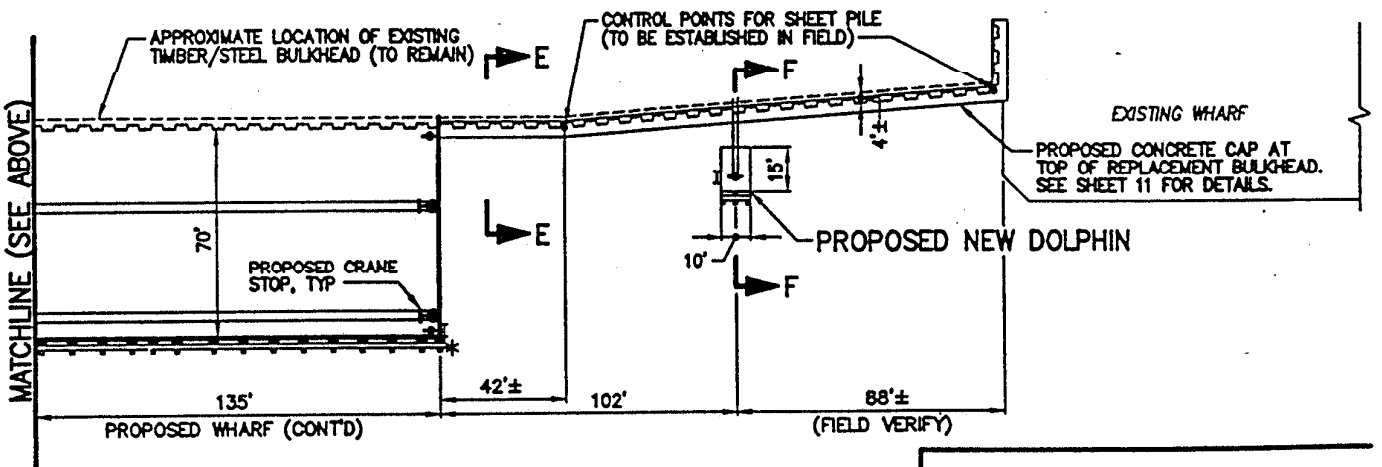

LEGEND

- LADDER
- BOLLARD
- FENDER SYSTEM
- SHEET PILE
- CRANE STOP
- * NAVIGATION MARKING LIGHT

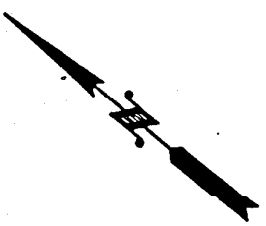

DETAILED SITE PLAN
PROPOSED IMPROVEMENTS

0' 20' 40' 60'

98-2-00516

PROPOSED REPLACEMENT BULKHEAD, NEW WHARF & FILL
IN: HYLEBOS WATERWAY
AT: TACOMA
COUNTY: PIERCE
STATE: WASHINGTON
APPL. BY: GENERAL METALS OF TACOI
SHEET: 6 OF 12 4/8/98
REV: 5/1/98

NEW STRUCTURES DESIGNED BY BERGER/ABAM

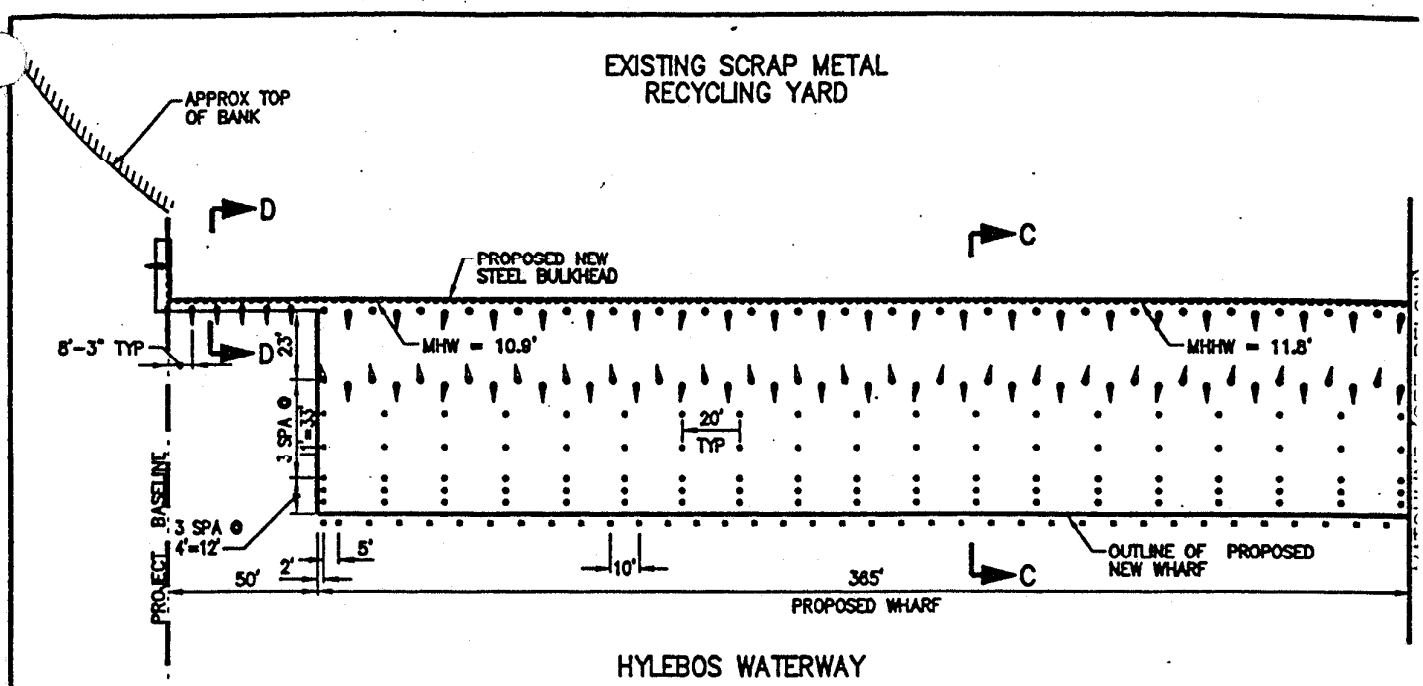

NOTE: WHARF LENGTH = 500'
REPLACEMENT BULKHEAD LENGTH = 740'±

FOR EXISTING STRUCTURES,
SEE SHEETS 3 AND 4

SEE SHEETS 9–12 FOR SECTIONS CC TO FF.

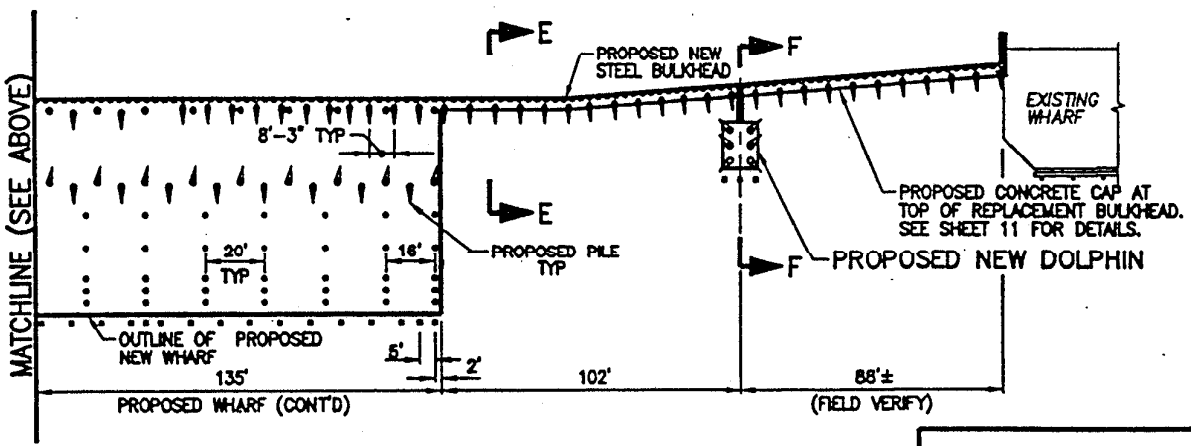

PILE LEGEND

- 24" ø x 3/8" WALL STEEL PIPE PILE – 6:12 BATTER
- 24" ø x 3/8" WALL STEEL PIPE PILE – 4:12 BATTER
- 24" ø x 3/8" WALL STEEL PIPE PILE – 3:12 BATTER
- 24" ø x 3/8" WALL STEEL PIPE PILE – PLUMB
- 16 1/2" OCTAGONAL – PRECAST CONCRETE PILE – PLUMB
- 16" SQUARE PRESTRESSED CONCRETE FENDER PILE
- AZ26 STEEL SHEET PILES

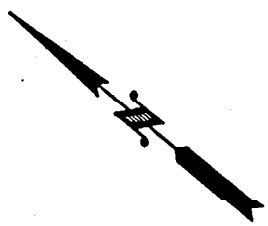

PILE AND PILE CAP PLAN

0' 20' 40' 60'

98–2–00516

PROPOSED REPLACEMENT
BULKHEAD, NEW WHARF & FILL

IN: HYLEBOS WATERWAY

AT: TACOMA

COUNTY: PIERCE

STATE: WASHINGTON

APPL. BY: GENERAL METALS OF TACOMA

SHEET: 7 OF 12 4/8/98

REV: 5/1/98

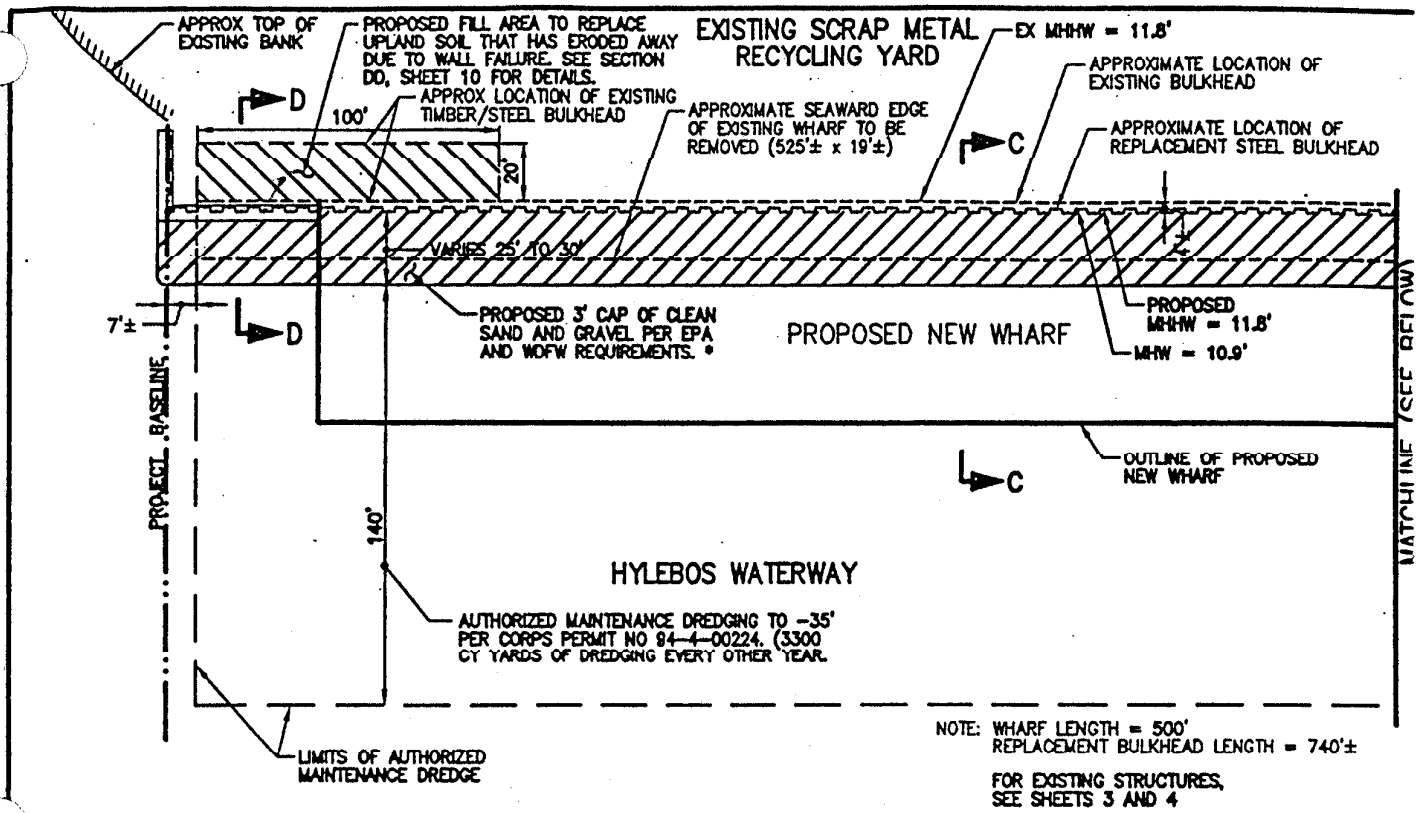

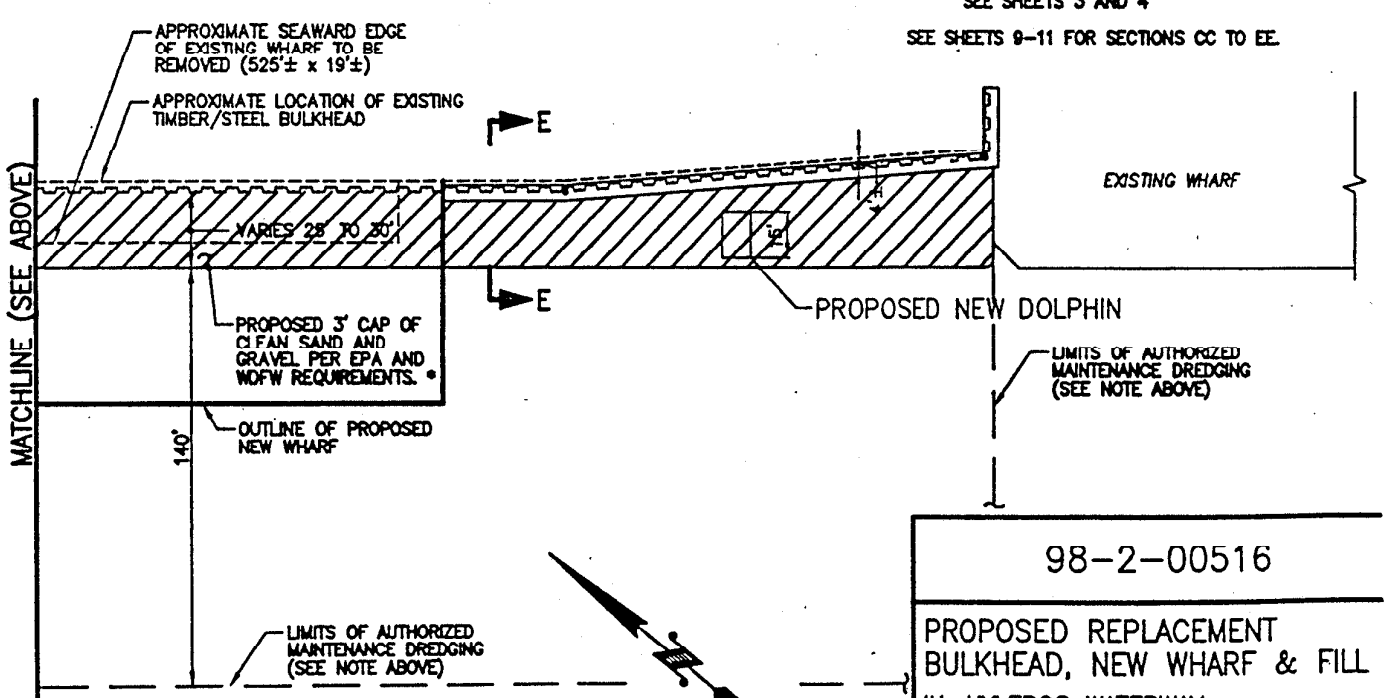

* PROPOSED SAND/GRAVEL CAP IS REQUIRED BY EPA AS PART OF THE HYLEBOS WATERWAY PROBLEM AREAS OF THE COMMENCEMENT BAY NEARSHORE/TIDE FLATS SUPERFUND SITE.

DETAILED SITE PLAN
PROPOSED SAND AND GRAVEL CAP

0' 20' 40' 60'

98-2-00516

PROPOSED REPLACEMENT BULKHEAD, NEW WHARF & FILL

IN: HYLEBOS WATERWAY

AT: TACOMA

COUNTY: PIERCE

STATE: WASHINGTON

APPL. BY: GENERAL METALS OF TACOMA

SHEET: 8 OF 12 4/8/98

REV: 5/1/98

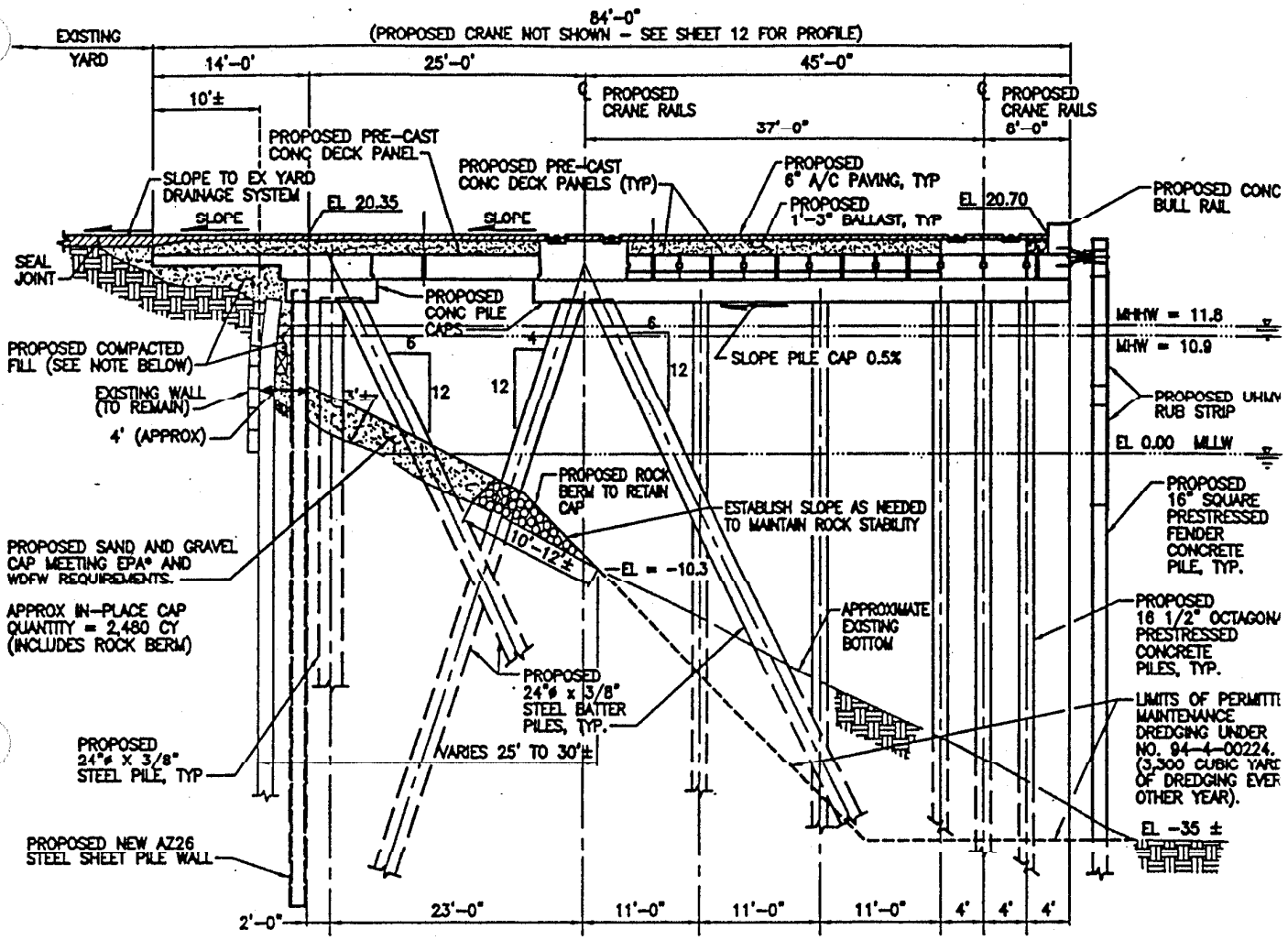

NOTE: APPROX. 1620 CY OF GRAVEL BACKFILL (IN-PLACE) WILL BE PLACED BETWEEN THE PROPOSED REPLACEMENT BULKHEAD AND THE EXISTING BULKHEAD FROM THE MUD LINE TO MHHW = 11.8'.

* PROPOSED CAPPING REQUIRED BY EPA AS PART OF THE HYLEBOS WATERWAY PROBLEM AREAS OF THE COMMENCEMENT BAY NEARSHORE/TIDE FLATS SUPERFUND SITE.

SECTION C-C
TYPICAL WHARF CROSS-SECTION

5' 15'
0' 10'

98-2-00516

PROPOSED REPLACEMENT BULKHEAD, NEW WHARF & FILL

IN: HYLEBOS WATERWAY

AT: TACOMA

COUNTY: PIERCE

STATE: WASHINGTON

APPL. BY: GENERAL METALS OF TACOMA

SHEET: 9 OF 12 4/8/98

REV: 5/1/98

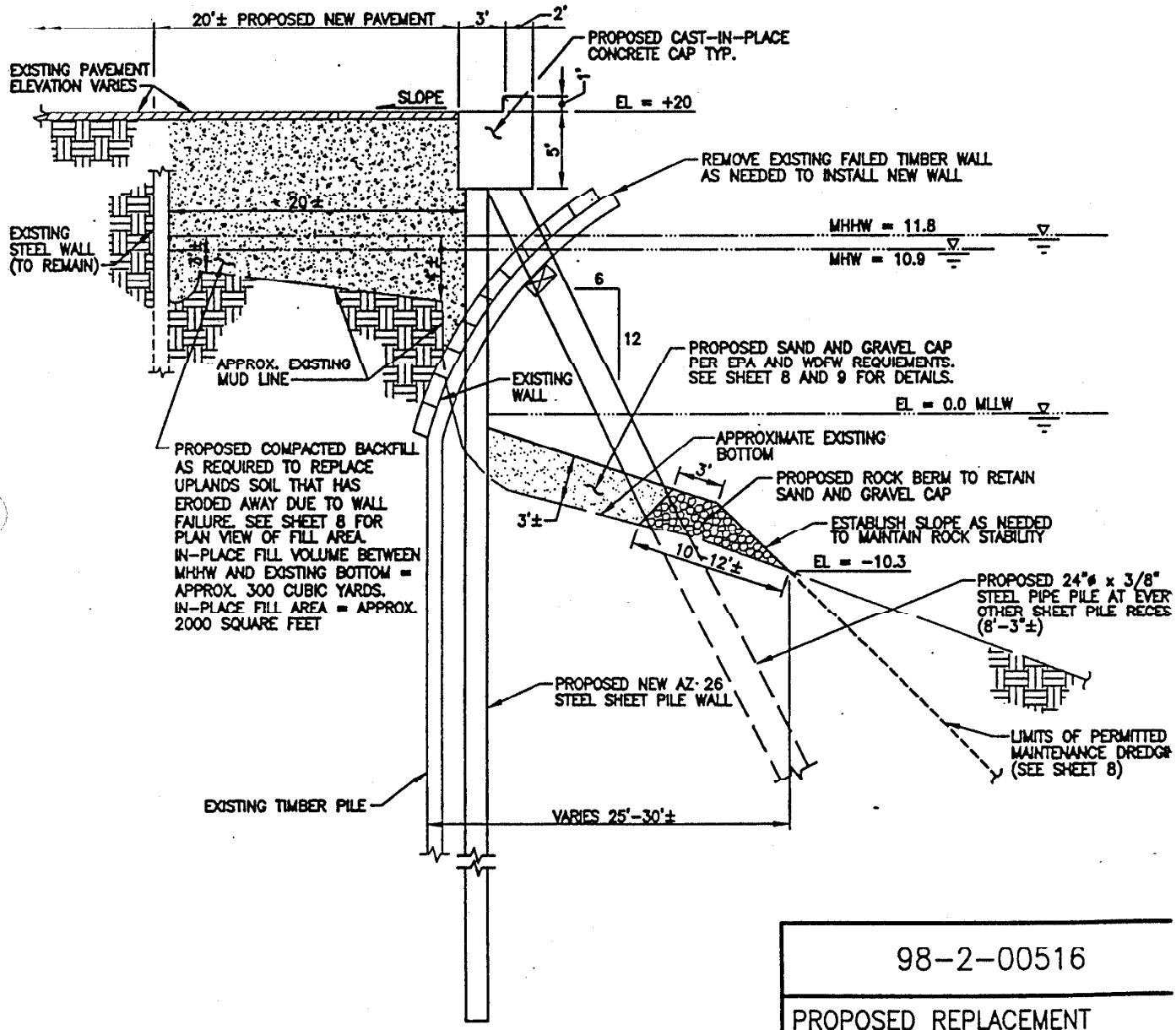

SECTION D-D
BULKHEAD REPLACEMENT
AT FAILED WALL

5' 20'
0' 10'

98-2-00516

PROPOSED REPLACEMENT
BULKHEAD, NEW WHARF & FILL

IN: HYLEBOS WATERWAY

AT: TACOMA

COUNTY: PIERCE

STATE: WASHINGTON

APPL. BY: GENERAL METALS OF TACOM

SHEET: 10 OF 12 4/8/98

REV: 5/1/98

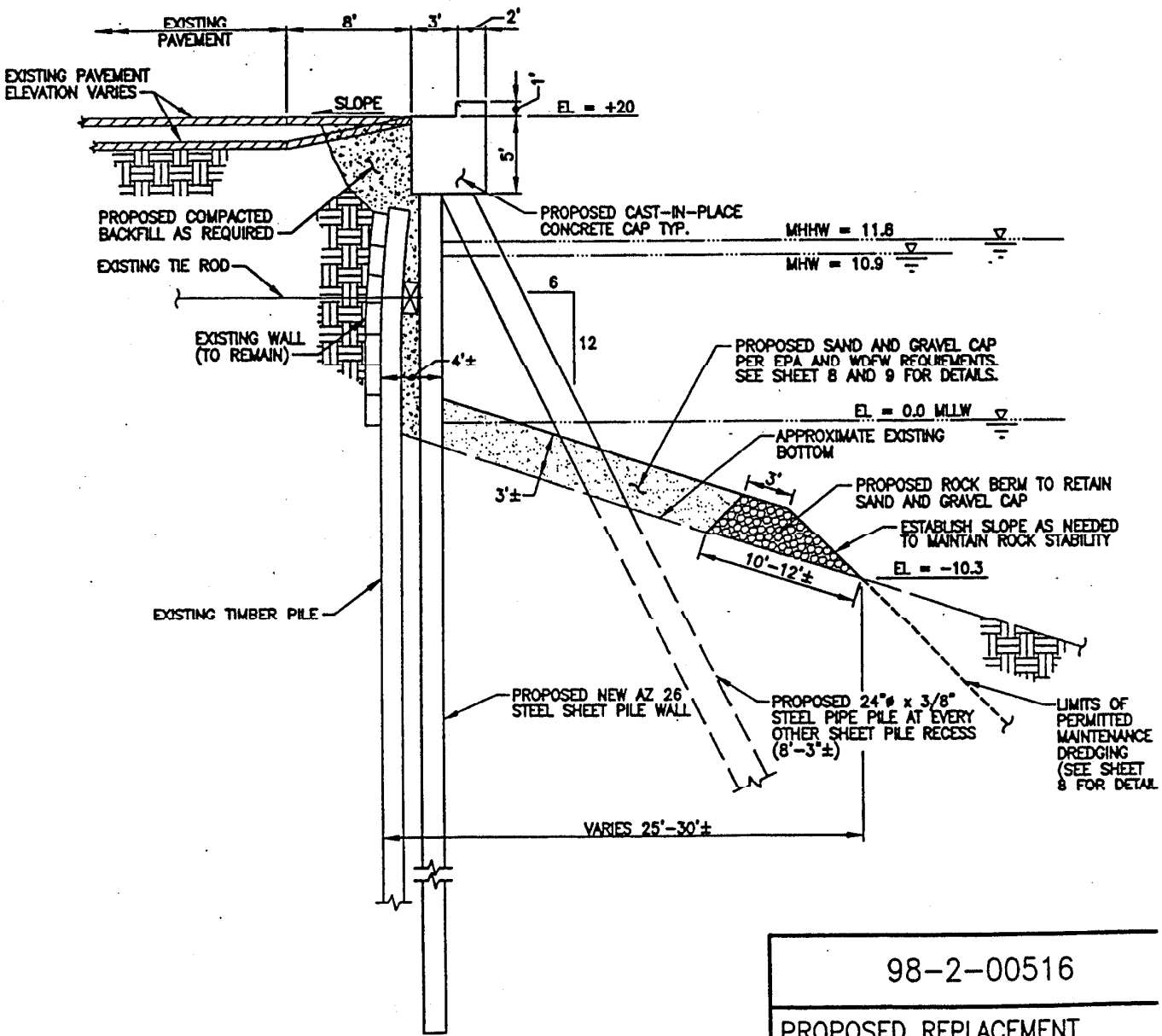

SECTION E-E
TYPICAL REPLACEMENT BULKHEAD

5' 20'
0' 10'

98-2-00516

PROPOSED REPLACEMENT BULKHEAD, NEW WHARF & FILL

IN: HYLEBOS WATERWAY

AT: TACOMA

COUNTY: PIERCE

STATE: WASHINGTON

APPL. BY: GENERAL METALS OF TACOM

SHEET: 11 OF 12 4/8/98

REV: 5/1/98

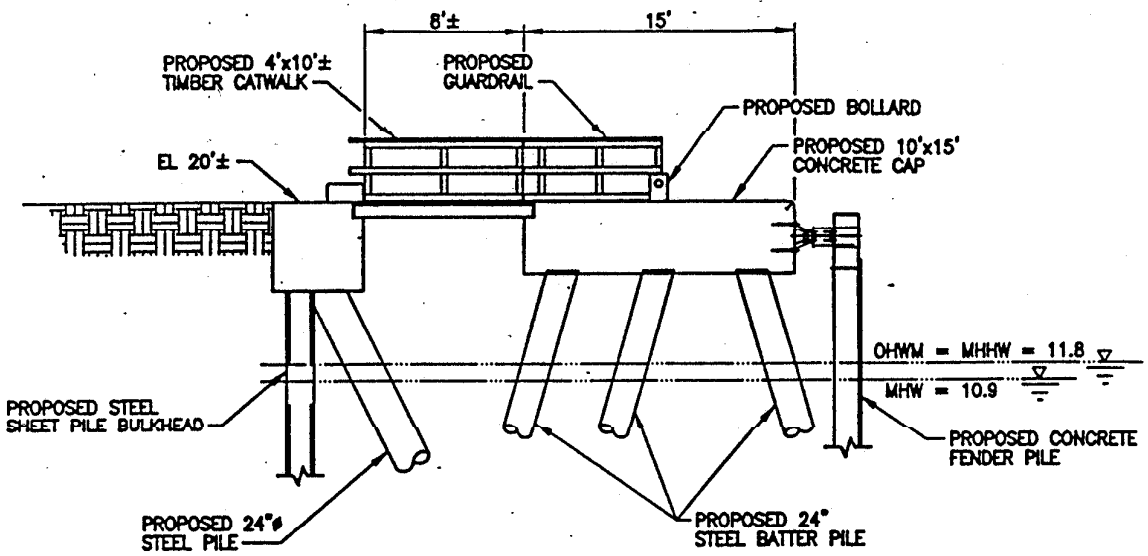

SECTION F–F
PROPOSED DOLPHIN

5' 20'
0' 10'

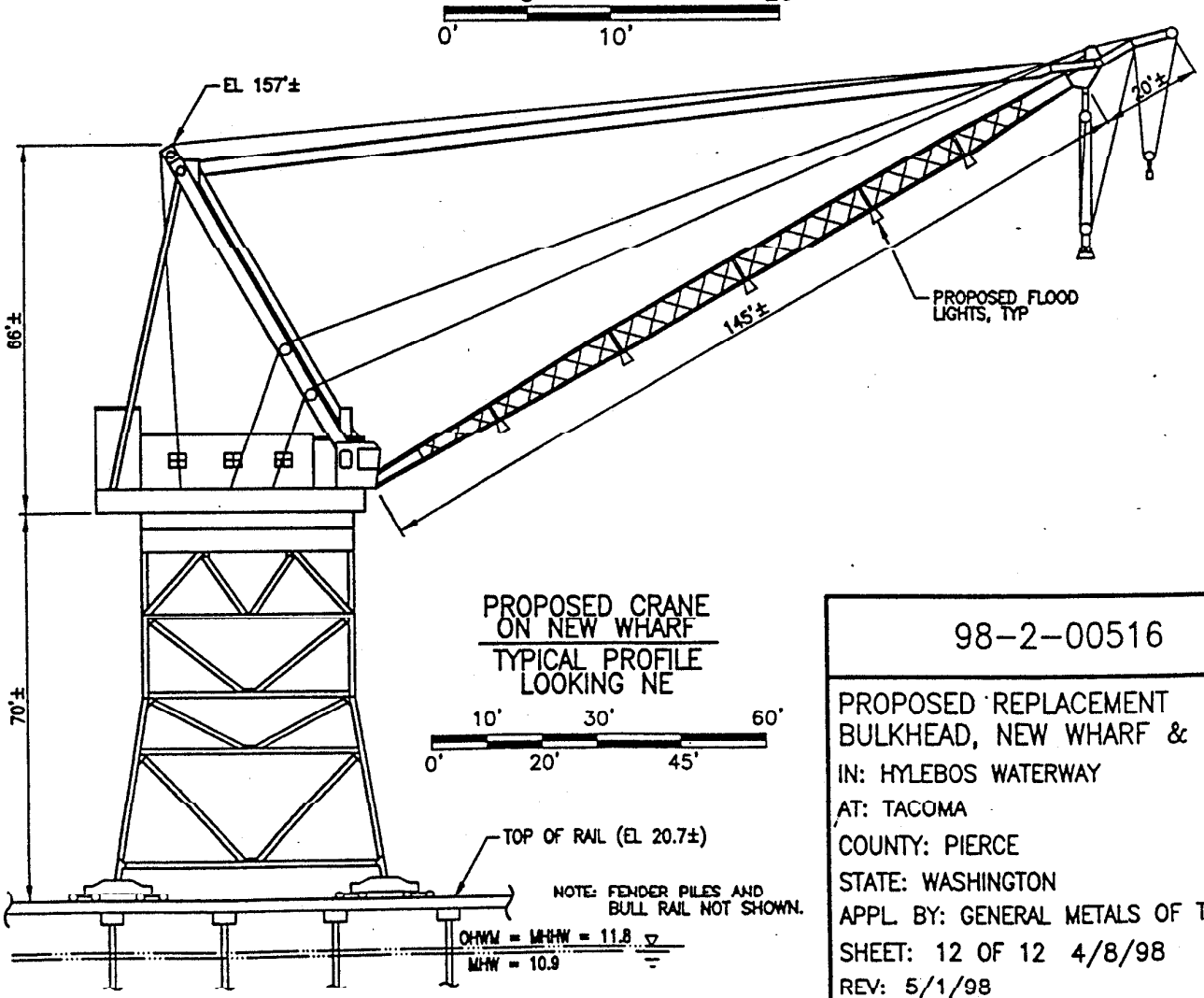

PROPOSED CRANE ON NEW WHARF
TYPICAL PROFILE LOOKING NE

10' 30' 60'
0' 20' 45'

98–2–00516

PROPOSED REPLACEMENT BULKHEAD, NEW WHARF & FILL
IN: HYLEBOS WATERWAY
AT: TACOMA
COUNTY: PIERCE
STATE: WASHINGTON
APPL. BY: GENERAL METALS OF TACOM
SHEET: 12 OF 12 4/8/98
REV: 5/1/98